The randomized integer convex hull

Imre Bárány*

Rényi Institute of Mathematics
Hungarian Academy of Sciences
POBox 127, 1364 Budapest, Hungary
and
Department of Mathematics
University College London
Gower Street, London WC1E 6BT
England

Jiří Matoušek**

Department of Applied Mathematics and
Institute of Theoretical Computer Science (ITI)
Charles University
Malostranské nám. 25, 118 00 Praha 1
Czech Republic

Abstract

Let $K \subset \mathbf{R}^d$ be a sufficiently round convex body (the ratio of the circumscribed ball to the inscribed ball is bounded by a constant) of a sufficiently large volume. We investigate the *randomized integer convex hull* $I_L(K) = \mathrm{conv}(K \cap L)$, where L is a randomly translated and rotated copy of the integer lattice $\mathbf{Z}^d$. We estimate the expected number of vertices of $I_L(K)$, whose behaviour is similar to the expected number of vertices of the convex hull of $\mathrm{Vol}\, K$ random points in K. In the planar case, we also describe the expectation of the missed area $\mathrm{Vol}\,(K \setminus I_L(K))$. Surprisingly, for K a polygon, the behaviour in this case is different from the convex hull of random points.

*Supported by Hungarian National Foundation Grants T 032452 and T 037846

**Supported by the by project LN00A056 of the Ministry of Education of the Czech Republic. Part of this research was done during a visit to the University College London and supported by an LMS grant.

1 Introduction

Let $\mathbf{Z}^d$ denote the d-dimensional integer lattice. Let $K \subset \mathbf{R}^d$ be a convex body, i.e., a convex compact set with nonempty interior. The *integer convex hull* $I(K)$ of K is the convex hull of all lattice points in K:

$$I(K) = \mathrm{conv}(K \cap \mathbf{Z}^d).$$

$I(K)$ is a convex polytope which is of central interest in integer programming. For instance, when maximizing a linear function f on the integer points in K, one looks for the maximum of f on $I(K)$.

Randomized integer convex hull. In this paper is we study the average behaviour of a randomized version of the integer convex hull. The lattice $\mathbf{Z}^d$ is replaced by L, a randomly translated and rotated copy of $\mathbf{Z}^d$, and we investigate

$$I_L(K) = \mathrm{conv}(K \cap L)$$

for a fixed convex body K. More precisely, for a translation vector $t \in [0,1)^d$ and a rotation $\rho \in SO(d)$ around the origin, we set $L_{t,\rho} = \rho(\mathbf{Z}^d + t)$, and we define

$$\mathcal{L} = \{L_{t,\rho} : t \in [0,1)^d, \rho \in SO(d)\}.$$

A probability measure on $\mathcal{L}$ is defined as the product of the Lebesgue measure on $[0,1)^d$ and of the normalized Haar measure on $SO(d)$. This measure is invariant under isometries of $\mathbf{R}^d$.

The expected number of vertices. First we are interested in the expected number of vertices

$$\mathbf{E}\left[f_0(I_L(K))\right],$$

where K is fixed and the expectation is with respect to a random choice of $L \in \mathcal{L}$.

As is common in the investigation of similar problems, we express the results using the function $u\colon K \to \mathbf{R}$ given by

$$u(x) = \mathrm{Vol}\left(K \cap (2x - K)\right).$$

That is, $u(x)$ is the volume of the so called Macbeath region, which is the intersection of K with K reflected about x (more information about properties of the Macbeath regions are given in Section 2). We also set

$$K(u < t) = \{x \in K : u(x) < t\}.$$

We need to assume that our convex body K is round and sufficiently large. Let us write $\mathcal{C}_D$ or $\mathcal{C}_D^d$ for the set of all convex bodies in $\mathbf{R}^d$ for which $R/r \leq D$, where K contains a ball of radius r and is contained in a concentric ball of radius R.

Theorem 1.1 *Given d and D, there exist constants c_0, c_1, c_2, depending only on d and D, such that for all $K \in \mathcal{C}_D$ with $\operatorname{Vol} K > c_0$,*

$$c_1 \operatorname{Vol} K(u < 1) \leq \mathbf{E}\left[f_0(I_L(K))\right] \leq c_2 \operatorname{Vol} K(u < 1).$$

With the convenient Vinogradov $\ll$ notation, the last inequalities say that, as $\operatorname{Vol} K \to \infty$,

$$\operatorname{Vol} K(u < 1) \ll \mathbf{E}\left[f_0(I_L(K))\right] \ll \operatorname{Vol} K(u < 1),$$

where the implied constants depend only on d and D.

A comparison with random polytopes. It is interesting and instructive to compare the randomized integer convex hull with a *random polytope* inscribed in K. The random polytope K_n is defined as the convex hull of n random points $x_1, \ldots, x_n$ chosen independently and uniformly from K. The proper scaling for comparison with Theorem 1.1 is $\operatorname{Vol} K = n$. Under this convention,

$$\operatorname{Vol} K(u < 1) \ll \mathbf{E}\left[f_0(K_n)\right] \ll \operatorname{Vol} K(u < 1) \tag{1}$$

as $n \to \infty$, with the implied constants depending only on d [BL1] (no additional assumptions on K are needed here). The same estimates hold for the expected number of i-dimensional faces of K_n, $\mathbf{E}\left[f_i(K_n)\right]$ [Bá89].

Theorem 1.1 and (1) show a strong analogy between random polytopes and the randomized integer convex hull. Most likely, $\mathbf{E}\left[f_i(I_L(K))\right]$ behaves like $\mathbf{E}\left[f_i(K_n)\right]$ for all i, but a proof looks hopeless for the time being.

The expected missed area. When approximating a convex body K by an inscribed polytope P, the volume of $K \setminus P$, the part of K missed by P, serves as a measure of approximation. When P is the random polytope K_n, and $\operatorname{Vol} K = n$, we have [BL1]

$$\operatorname{Vol} K(u < 1) \ll \mathbf{E}\left[\operatorname{Vol}(K \setminus K_n)\right] \ll \operatorname{Vol} K(u < 1).$$

An analogous result for the randomized integer convex hull can be conveniently formulated using the function $v\colon K \to \mathbf{R}$ defined by

$$v(x) = \min\{\operatorname{Vol}(K \cap H) : H \text{ is a halfspace with } x \in H\}. \tag{2}$$

The functions u and v behave very similarly. For instance, $u(x) \leq 2v(x)$, and according to a result from [BL1], if $v(x) \leq (2d)^{-2d}\mathrm{Vol}\, K$ or if $u(x) \leq (12d^3)^{-d}\mathrm{Vol}\, K$, then

$$v(x) \leq (3d)^d u(x) \tag{3}$$

Thus the above estimate for the missed volume can be written as

$$\mathrm{Vol}\, K(v < 1) \ll \mathbf{E}\left[\mathrm{Vol}\left(K \setminus K_n\right)\right] \ll \mathrm{Vol}\, K(v < 1).$$

Here the analogy between random polytopes and the integer convex hull no longer holds. We show this for $d = 2$ with the following results.

Theorem 1.2 *For $K \in \mathcal{C}_D^2$, as $\mathrm{Area}\, K \to \infty$,*

$$\int_K \frac{dx}{v(x)+1} \ll \mathbf{E}\left[\mathrm{Area}\left(K \setminus I_L(K)\right)\right] \ll \int_K \frac{dx}{v(x)+1}$$

with the implied constants depending only on D.

Theorem 1.3 *For any planar convex body K, we have*

$$(\log \mathrm{Area}\, K)^2 \ll \int_K \frac{dx}{v(x)+1} \ll (\mathrm{Area}\, K)^{\frac{1}{3}}$$

as $\mathrm{Area}\, K \to \infty$ (the implied constants are universal).

The upper bound here is the best possible, as we will show after the proof of Theorem 1.3. The lower bound is also the best possible, apart from the constant: letting Q to be a square it is not hard to see that

$$\int_Q \frac{dx}{v(x)+1} \ll (\log \mathrm{Area}\, Q)^2$$

where the implied constant is universal. The same applies to any fixed convex polygon.

The example of the square Q shows that for the random polygon, the expected missed area is $\log \mathrm{Area}\, Q$, while for the randomized integer convex hull it is $(\log \mathrm{Area}\, Q)^2$. So this is where the analogy breaks down. The reason may be that $I(Q)$ contains many more lattice points on its boundary than Q_n. Another explanation is that what is measured here is a metric and not combinatorial quantity.

We mention that for a smooth convex body $K \in \mathcal{C}_D^d$, the missed volume of $\lambda K \setminus I(\lambda K)$ behaves the same way as for random polytopes when $\lambda \to \infty$ (cf. [BL2]):

$$\lambda^{d\frac{d-1}{d+1}} \ll \mathrm{Vol}\,(\lambda K \setminus (I(\lambda K)) \ll \lambda^{d\frac{d-1}{d+1}}.$$

So the misbehaviour of the square, and of convex polygons in general, is an unexpected fact (at least for the authors).

Other related results. Let us mention some other known results concerning the integer convex hull. Motivated by problems in integer programming, Cook et al. [CHKM] show that for a rational polyhedron $K \subset \mathbf{R}^d$, $f_0(I(K)) \ll (\mathrm{size}\, K)^{d-1}$, where the size of K is the number of digits needed to describe the inequalities defining K. (K is a rational polyhedron if the defining inequalities have integral coefficients.) This bound is the best possible in general [BHL].

The following estimate was proved in [BL2] for the integer convex hull of large balls, and more generally, for $I(\lambda K)$ with a fixed smooth K and $\lambda \to \infty$:

$$\lambda^{d\frac{d-1}{d+1}} \ll f_i(I(\lambda K)) \ll \lambda^{d\frac{d-1}{d+1}}$$

with the implied constants depending on K. We note that this behaviour is again analogous to that of a random polytope (and to the randomized integer convex hull as in Theorem 1.1), since for K fixed and smooth and $K' = \lambda K$ the function $\lambda \mapsto \mathrm{Vol}\, K'(u < 1)$ has order $\lambda^{d\frac{d-1}{d+1}}$.

2 Preliminaries

Macbeath regions. In the subsequent proofs we are going to use the properties of Macbeath regions and minimal caps extensively. The Macbeath region, or M-region for short, of a convex body K centred at $x \in K$ is

$$M(x) = M_K(x) = [x + (K - x)] \cap [x - (K - x)] = K \cap (2x - K).$$

The definition comes from Macbeath [Ma]; also see [ELR] and [BL1]. The region $M(x)$ is centrally symmetric with centre x. Its copies blown up by a factor $\lambda > 0$ from the centre x are denoted by

$$M(x, \lambda) = x + \lambda(M(x) - x).$$

With this notation $u(x) = \mathrm{Vol}\, M(x)$ and $K(u < t) = \{x \in K : u(x) < t\}$. Macbeath proved [Ma] that $u^{1/d}$ is a concave function on K. The quantity

$$\frac{\mathrm{Vol}\, K(u < t\mathrm{Vol}\, K)}{\mathrm{Vol}\, K}$$

is invariant under nondegenerate affine transformations, is positive and nondecreasing for $t > 0$, and is equal to 1 for $t \geq 1$. It is shown in [BL1] that for $0 < t < c$ (where c depends only on d)

$$t\left(\log\frac{1}{t}\right)^{d-1} \ll \frac{\mathrm{Vol}\, K(u < t\mathrm{Vol}\, K)}{\mathrm{Vol}\, K} \ll t^{\frac{2}{d+1}}, \tag{4}$$

with the implied constant depending only on d. Here the lower bound is reached on polytopes, and the upper bound on smooth enough convex bodies. The last estimates and Theorem 1.1 imply that, for all convex bodies $K \in \mathcal{C}_D$,

$$(\log \mathrm{Vol}\, K)^{d-1} \ll \mathbf{E}\left[f_0(I_L(K))\right] \ll (\mathrm{Vol}\, K)^{\frac{d-1}{d+1}},$$

as $\mathrm{Vol}\, K \to \infty$. The upper bound is reached for smooth convex bodies, and the lower bound is attained for polytopes.

Minimal caps. We recall the definition (2) of $v\colon K \to \mathbf{R}$:

$$v(x) = \min\{\mathrm{Vol}\,(K \cap H) : H \text{ is a halfspace with } x \in H\}.$$

The minimum is reached on a halfspace H_0. Then $C(x) = K \cap H_0$ is called a *minimal cap*. The minimal cap of $x \in K$ need not be unique, but we fix one of the minimal caps and denote it by $C(x)$. The next two results are Lemma 2 and Theorem 7 from [BL1]. The former is used in the proof of inequality (3).

Lemma 2.1 *If $x \in K$ and $v(x) < (2d)^{-2d}\mathrm{Vol}\, K$, then*

$$C(x) \subset M(x, 3d).$$

The following theorem expresses an "almost concavity" property of the function u:

Theorem 2.2 *If K is a d-dimensional convex body, $\varepsilon \leq (2d)^{-2d}$ and $\lambda > 1$, then*

$$\mathrm{Vol}\, K(u < \varepsilon\mathrm{Vol}\, K) \geq c_d\lambda^{-d}\mathrm{Vol}\, K(u < \lambda\varepsilon\mathrm{Vol}\, K),$$

with the positive constant c_d depending only on d.

3 The expected number of vertices

In this section we prove Theorem 1.1. We begin with a few auxiliary claims. The first three hold for an arbitrary convex body K in $\mathbf{R}^d$.

Claim 3.1 *If x is a vertex of $I(K)$, then $M(x) \cap \mathbf{Z}^d = \{x\}$.*

Proof. If $z \neq x$ is another element of $M(x) \cap \mathbf{Z}^d$, then so is its reflection $2x - z$ about x. But then x is the midpoint of the segment $[z, 2x - z] \subset M(x) \cap \mathbf{Z}^d$ and cannot be a vertex of $I(K)$. □

Claim 3.2 *If $C(x) \cap \mathbf{Z}^d = \{x\}$, then x is a vertex of $I(K)$.*

Proof. Trivial. □

Claim 3.3 *If $\operatorname{dist}(x, \partial K) = \delta$, then*

$$v(x) \leq \frac{d\delta}{2r} \operatorname{Vol} K, .$$

where r is the radius of the largest ball inscribed in K.

Proof. The ball $B(x, \delta)$ centred at x and of radius δ touches ∂K at y, say. Let us write h_t for the hyperplane orthogonal to $x - y$ and containing the point

$$y + t\frac{x - y}{\|x - y\|}.$$

Let $U = \max_t \operatorname{Vol}_{d-1}(h_t \cap K)$, and let C be the smaller of the caps cut off from K by h_δ. Now $\operatorname{Vol} K \geq \frac{2r}{d} U$. Consequently,

$$v(x) \leq \operatorname{Vol} C \leq \delta U \leq \frac{d\delta}{2r} \operatorname{Vol} K.$$

□

Lemma 3.4 *Let $K \in \mathcal{C}_D^d$ have a sufficiently large volume (larger than a suitable function of d and D). If $M(x, 3d) \cap \mathbf{Z}^d = \{x\}$, then $C(x) \cap \mathbf{Z}^d = \{x\}$.*

Proof. We observe that $B(x,\sqrt{d}) \not\subset M(x,3d)$, since $B(x,\sqrt{d})$ contains many lattice points besides x. Then $B(x,\sqrt{d}/3)$ is not contained in K. Thus $\delta = \operatorname{dist}(x,\partial K) \le \sqrt{d}/3$, and we can use Claim 3.3:

$$v(x) \le \frac{d\delta}{2r}\operatorname{Vol} K \le \frac{d^{3/2}}{6r}\operatorname{Vol} K \le (2d)^{-2d}\operatorname{Vol} K$$

if $\operatorname{Vol} K$ is sufficiently large, since $r \to \infty$. We can now apply Lemma 2.1. $\square$

Lemma 3.5 *If C is an 0-symmetric convex body in $\mathbf{R}^d$ and $\operatorname{Vol} C \le \left(\frac{2}{\sqrt{d}+2}\right)^d$, then*

$$\operatorname{Prob}[C \cap \rho\mathbf{Z}^d = \{0\}] \ge \frac{1}{2},$$

where the probability is with respect to a random rotation $\rho \in SO(d)$.

Proof. Let us assume $z \in \mathbf{Z}^d$, $z \ne 0$, and let $Q(z)$ denote the aligned unit cube centred at z. If $x \in Q(z)$, then $\|x - z\| \le \sqrt{d}/2$, which is the radius of the smallest ball containing $Q(z)$. Then, writing $\alpha = (1+\sqrt{d}/2)^{-1}$, we have

$$\|x\| \le \|z\| + \frac{\sqrt{d}}{2} \le \|z\|/\alpha,$$

and consequently, $\|z\| \ge \alpha\|x\|$.

Now we compute

$$\begin{aligned}
\mathbf{E}\left[|C \cap \rho\mathbf{Z}^d|\right] &= \mathbf{E}\left[|\rho C \cap \mathbf{Z}^d|\right] = \sum_{z\in\mathbf{Z}^d} \operatorname{Prob}[z \in \rho C] \\
&= 1 + \sum_{z\in\mathbf{Z}^d\setminus\{0\}} \int_{Q(z)} \operatorname{Prob}[z \in \rho C]\, dx \\
&\le 1 + \int_{\mathbf{R}^d\setminus Q(0)} \operatorname{Prob}\left[\alpha x \in \rho C\right]\, dx
\end{aligned}$$

as points closer to the origin have higher probability of being contained in a rotated copy of C. The last integral, when taken over all $x \in \mathbf{R}^d$, is equal to $\alpha^{-d}\operatorname{Vol} C$. So

$$\mathbf{E}\left[|C \cap \rho\mathbf{Z}^d|\right] \le 1 + \alpha^{-d}\operatorname{Vol} C \le 2.$$

We set $p = \text{Prob}[C \cap \rho\mathbf{Z}^d = \{0\}]$. Then

$$\begin{aligned} 2 &\geq \mathbf{E}\left[|C \cap \rho\mathbf{Z}^d|\right] \\ &= \text{Prob}[C \cap \rho\mathbf{Z}^d = \{0\}] + \sum_{k=1}^{\infty}(2k+1)\text{Prob}[|C \cap \rho\mathbf{Z}^d| = 2k+1] \\ &\geq p + 3 \cdot \text{Prob}[|C \cap \rho\mathbf{Z}^d| > 1] = p + 3(1-p) = 3 - 2p, \end{aligned}$$

implying $p \geq 1/2$. □

Now we re-express the expected number of vertices of $I_L(K)$. For a point $x \in K$, let $P_\rho(x)$ denote the probability that x is a vertex of $I_L(K)$, where $L = \rho(\mathbf{Z}^d) + x$ is the integer lattice randomly rotated around 0 and then translated to x (or equivalently, the origin is first translated to x and then a random rotation around x is applied). The probability is with respect to a random choice of $\rho \in SO(d)$.

Lemma 3.6 *The expectation of $f_0(I_L(K))$ with respect to a random choice of $L \in \mathcal{L}$ satisfies*

$$\mathbf{E}\left[f_0(I_L(K))\right] = \int_K P_\rho(x)\, dx.$$

Proof. For $L \in \mathcal{L}$ and $z \in L$ we define

$$\chi(L, z) = \begin{cases} 1 & \text{if } z \text{ is a vertex of } I_L(K) \\ 0 & \text{otherwise.} \end{cases}$$

We note that the value of χ does not change by applying the same isometry on K, L and z. We calculate

$$\begin{aligned} \mathbf{E}\left[f_0(I_L(K))\right] &= \int_{\mathcal{L}} \sum_{z \in L} \chi(L, z)\, dL \\ &= \int_{SO(d)} \int_{[0,1)^d} \sum_{z \in \rho(\mathbf{Z}^d + t)} \chi(\rho(\mathbf{Z}^d + t), z)\, dt\, d\rho \\ &= \int_{SO(d)} \int_{[0,1)^d} \sum_{w \in \mathbf{Z}^d} \chi(\rho(\mathbf{Z}^d + t), \rho(w + t))\, dt\, d\rho \\ &= \int_{SO(d)} \int_{\mathbf{R}^d} \chi(\rho(\mathbf{Z}^d + y), \rho y)\, dy\, d\rho \end{aligned}$$

$$
\begin{aligned}
&= \int_{SO(d)} \int_{\mathbf{R}^d} \chi(\rho(\mathbf{Z}^d) + \rho y, \rho y)\, dy\, d\rho \\
&= \int_{SO(d)} \int_{\mathbf{R}^d} \chi(\rho(\mathbf{Z}^d) + x, x)\, dx\, d\rho \\
&= \int_K \int_{SO(d)} \chi(\rho(\mathbf{Z}^d) + x, x)\, d\rho\, dx \\
&= \int_K P_\rho(x)\, dx
\end{aligned}
$$

as claimed. □

Proof of Theorem 1.1. We begin with the upper bound. Claim 3.1 and Minkowski's theorem show that $P_\rho(x) = 0$ if $u(x) > 2^d$. Thus

$$\mathbf{E}\left[f_0(I_L(K))\right] = \int_{K(u \le 2^d)} P_\rho(x)\, dx \le \operatorname{Vol} K(u \le 2^d).$$

The last expression is $\ll \operatorname{Vol} K(u < 1)$ by Theorem 2.2 with $\lambda = 2^d$ and $\varepsilon = (\operatorname{Vol} K)^{-1}$, which gets smaller than $(2d)^{-2d}$ when $\operatorname{Vol} K$ is large enough.

Next, we derive the lower bound in Theorem 1.1 using Lemma 3.5. We set $\eta = (3d)^{-d}(\frac{2}{\sqrt{d}+2})^d$. We have

$$\int_K P_\rho(x)\, dx \ge \int_{K(u \le \eta)} P_\rho(x)\, dx$$

By Lemma 3.5 $M(x, 3d) \cap \big(\rho(\mathbf{Z}^d) + x\big) = \{x\}$ with probability at least $1/2$. Then Claims 3.4 and 3.2 imply that x is a vertex of $I_L(K)$. Thus

$$\mathbf{E}\left[f_0(I_L(K))\right] \ge \int_{K(u \le \eta)} \frac{1}{2}\, dx \ge \frac{1}{2} \operatorname{Vol} K(u \le \eta) \gg \operatorname{Vol} K(u < 1),$$

where the last inequality, again, follows from Theorem 2.2 with $\lambda = 1/\eta$ and $\varepsilon = \eta(\operatorname{Vol} K)^{-1}$. □

4 The expected missed area

In this section we begin with the proof of Theorem 1.2. We are going to establish the upper bound, and the following lower bound for the expected missed area:

Proposition 4.1 *For $K \in \mathcal{C}_D^2$, as* $\operatorname{Area} K \to \infty$,

$$\int_{K(v\geq 1),\, w(x)\leq 1/3} \frac{dx}{v(x)} \ll \mathbf{E}\left[\operatorname{Area}(K \setminus I_L(K))\right]$$

with the implied constants depending only on D. Here $w(x)$ is the width of the minimal cap $C(x)$ in the direction orthogonal to the line that cuts it off from K.

The lower bound of Theorem 1.2 will then follow from the following result:

Theorem 4.2 *If $K \in \mathcal{C}_D^2$, then, as* $\operatorname{Area} K \to \infty$,

$$\int_{K(v\geq 1),\, w(x)\leq 1/3} \frac{dx}{v(x)} \gg \int_K \frac{dx}{v(x)+1}.$$

The proof of this theorem is lengthy, and it is given in Section 6.

Auxiliary claims. The following two lemmas are about a rectangle T with sides of length w and ℓ, where $w < \ell$ (w is thought of as the width, and ℓ as the length of T). Let $A = wl$ denote the area of T. We write $\mathbf{P}$ for the set of primitive vectors in $\mathbf{Z}^2$; that is, $\mathbf{P} = \{(a,b) \in \mathbf{Z}^2 : a, b \text{ relatively prime}\}$.

Lemma 4.3 *Let $A > 1$ and $w \leq 1/3$. Then, for a random lattice $L \in \mathcal{L}$,*

$$\operatorname{Prob}[T \cap L = \emptyset] \gg \frac{1}{A}.$$

Proof. Here it is more convenient to think of the lattice as being fixed (equal to $\mathbf{Z}^2$), while a random isometry is applied to T; namely, first a random rotation, and then a random translation in $[0,1)^2$. Moreover, the translation vector can be chosen from any basic parallelogram of the lattice $\mathbf{Z}^2$, instead of $[0,1)^2$.

Let us consider $z \in \mathbf{P}$ with $\|z\| \leq \frac{1}{3w}$. Then T has a position T' lying completely between two consecutive z-lattice lines (i.e., lines parallel to z and containing points of $\mathbf{Z}^2$). We first check that such a position determines z uniquely. If not, then there is another $z' \in \mathbf{P}$ with T' lying completely between two consecutive z'-lattice lines. So T' lies in a parallelogram with sides z and z', which is lattice point free, implying $A \leq 1$. To place T between two consecutive z-lattice lines, we can first choose the rotation from

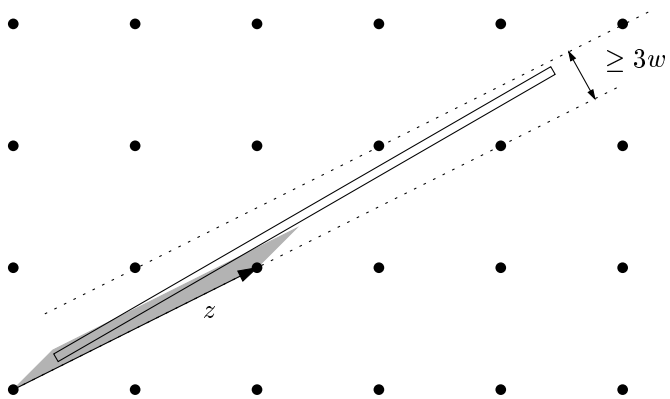

Figure 1: Lattice-point free positions of T

an angular range of at least φ, where $\sin\varphi \geq \frac{1}{\ell}\left(\frac{2}{3\|z\|} - w\right)$ (see Fig. 1), and for each such rotation the lower left corner of T can be placed anywhere in the shaded parallelogram of measure $\frac{1}{3}$. Thus the set of positions for a given z has probability at least

$$\frac{1}{3}\varphi > \frac{1}{3}\sin\varphi \geq \frac{1}{3\ell}\left(\frac{2}{3\|z\|} - w\right) \geq \frac{1}{9\ell}\frac{1}{\|z\|}.$$

Summing this for all $z \in \mathbf{P}$ with $\|z\| \leq \frac{1}{3w}$, we get that the probability in question is at least

$$\frac{1}{9\ell}\sum_{\|z\|\leq 1/(3w)} \frac{1}{\|z\|} \gg \frac{1}{\ell w} = \frac{1}{A}.$$

□

Lemma 4.4 *For every rectangle T with parameters w, ℓ and $A = w\ell$*

$$\mathrm{Prob}[T \cap L = \emptyset] \ll \frac{1}{A}.$$

Proof. Let us consider a lattice-point free position T' of T. By the Flatness Theorem (cf. [Kh], [KL] and [Hu] for the planar case) there is a $z \in \mathbf{P}$ such that T' intersects at most three consecutive z-lattice lines. This implies

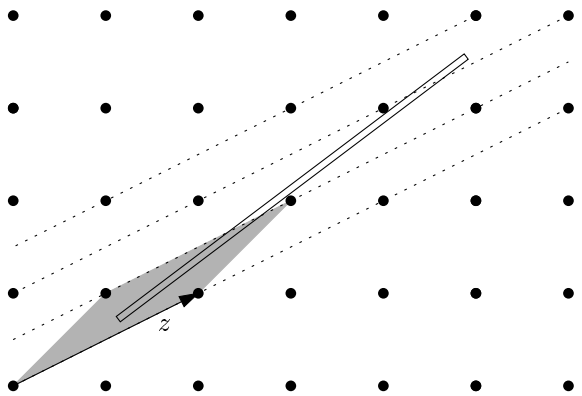

Figure 2: Lattice-point free positions of T; an upper bound

$w \leq \frac{4}{\|z\|}$. The range of admissible rotations φ can be estimated by (see Fig. 2)

$$\varphi \leq \frac{2}{\pi} \sin \varphi \leq \frac{2}{\pi} \frac{4}{\|z\|\ell}.$$

So for fixed z the probability in question is at most $\frac{8}{\pi \|z\| \ell}$. Summing this for all $z \in \mathbf{P}$ with $\|z\| \leq \frac{3}{w}$ yields the lemma. $\square$

Since each planar convex body of area A can be enclosed in a rectangle of area at most $2A$, we obtain:

Corollary 4.5 *Let $\mathcal{C}(A)$ be the set of all convex bodies in $\mathbf{R}^2$ having area A. Then, as $A \to \infty$,*

$$\frac{1}{A} \ll \sup_{K \in \mathcal{C}(A)} \mathrm{Prob}[K \cap \mathbf{Z}^2 = \emptyset] \ll \frac{1}{A}.$$

Claim 4.6 *If $K \in \mathcal{C}_D^2$ and $\mathrm{dist}(x, \partial K) < \sqrt{2}$, then the minimal cap $C(x)$ contains a rectangle $T(x)$ with x at the midpoint of an edge of $T(x)$ and*

$$\mathrm{Area}\, T(x) \gg \mathrm{Area}\, C(x),$$

with the implied constant depending only on D.

Proof. Elementary plane geometry. Omitted. □

For both the upper and lower bounds in Theorem 1.2, we estimate the missed area using the formula

$$\mathbf{E}\left[\text{Area}\left(K \setminus I_L(K)\right)\right] = \int_K \text{Prob}[x \notin I_L(K)]\, dx \tag{5}$$

where Prob is understood with x fixed and $L \in \mathcal{L}$ random (a formal proof can be done along similar lines as the proof of Lemma 3.6). Note that $x \notin I_L(K)$ implies that x is close to the boundary: it is easy to see that if a square centred at x and having edge length 2 is contained in K, then $x \in I_L(K)$ for every $L \in \mathcal{L}$.

Proof of the upper bound in Theorem 1.2. If $x \notin I_L(K)$, then there is a halfplane H containing x on its boundary and such that $H \cap K \cap L = \emptyset$. The rectangle $T(x)$ as in Claim 4.6 is the union of two internally disjoint rectangles $T^+(x)$ and $T^-(x)$, both having x as a vertex. The cap $H \cap K$ contains one of them. Thus

$$\text{Prob}[x \notin I_L(K)] \leq \text{Prob}[T^+(x) \cap L = \emptyset] + \text{Prob}[T^-(x) \cap L = \emptyset].$$

The last two probabilities are equal. So, writing b_1 for the implied constant in Lemma 4.3, we have

$$\begin{aligned}
\mathbf{E}\left[\text{Area}\left(K \setminus I_L(K)\right)\right] &\leq \int_K 2 \cdot \text{Prob}[T^+(x) \cap L = \emptyset]\, dx \\
&\leq \int \min\left\{2, \frac{2b_1}{v(x)}\right\} dx = \int_{K(v \leq 2b_1)} 2\, dx + \int_{K(v \geq 2b_1)} \frac{2b_1}{v(x)}.
\end{aligned}$$

For the first term we have

$$\int_{K(v \leq 2b_1)} 2\, dx \leq 2(2b_1 + 1) \int_{K(v \leq 2b_1)} \frac{dx}{v(x) + 1},$$

while the second term is

$$\int_{K(v \geq 2b_1)} \frac{dx}{v(x)} \leq \left(1 + \frac{1}{2b_1}\right) \int_{K(v \geq 2b_1)} \frac{dx}{v(x) + 1}.$$

This implies the upper bound in the theorem. □

Proof of Proposition 4.1. We start with (5) and we observe that $C(x) \cap L = \emptyset$ implies $x \notin I_L(K)$. Thus,

$$\mathbf{E}\left[\text{Area}\,(K \setminus I_L(K))\right] \geq \int_K \text{Prob}[C(x) \cap L = \emptyset]\, dx.$$

Let $T^*(x)$ be the minimal rectangle containing $C(x)$ and having width $w(x)$ in direction orthogonal to L. Since $\text{Area}\, T^*(x) \ll \text{Area}\, C(x)$ we have, using Lemma 4.4,

$$\begin{aligned} \mathbf{E}\left[\text{Area}\,(K \setminus I_L(K))\right] &\geq \int_K \text{Prob}[T^*(x) \cap L = \emptyset]\, dx \\ &\gg \int_{K\,(v \geq 1),\, w(x) \leq 1/3} \frac{dx}{v(x)}. \end{aligned}$$

□

5 Proof of Theorem 1.3

This is quite easy and is based on

$$\int_K \frac{dx}{v(x)+1} = \sum_{1 \leq n \leq A+1} \int_{K\,(n-1 \leq v < n)} \frac{dx}{v(x)+1}.$$

In the nth term, the integrand is between $\frac{1}{n+1}$ and $\frac{1}{n}$. Now the general upper bound (4) shows that $\text{Area}\, K(v < n) \ll n^{2/3} A^{1/3}$ as long as $n \leq cA$ (where $c > 0$ is a universal constant). So

$$\begin{aligned} \int_K \frac{dx}{v(x)+1} &\leq \sum_{1 \leq n \leq A+1} \frac{1}{n}\Big(\text{Area}\, K(v < n) - \text{Area}\, K(v < n-1)\Big) \\ &= \sum_{1 \leq n \leq A+1} \left(\frac{1}{n} - \frac{1}{n+1}\right) \text{Area}\, K(v < n) + \frac{1}{A+1} \text{Area}\, K \\ &\ll \sum_{1 \leq n \leq cA} \frac{n^{2/3} A^{1/3}}{n^2} + \sum_{cA < n \leq A+1} \frac{A}{n^2} + \frac{A}{A+1} \ll A^{1/3}. \end{aligned}$$

The proof of the lower bound is almost identical, but we use the lower bound from (4), saying that $\text{Area}\, K(v < n) \gg n \log \frac{A}{n}$ when $n \leq cA$, again

with a universal and positive c:

$$\begin{aligned}\int \frac{dx}{v(x)+1} &\geq \sum_{1\leq n\leq A} \frac{1}{n+1}\Big(\operatorname{Area} K(v<n) - \operatorname{Area} K(v<n-1)\Big)\\ &\geq \sum_{1\leq n\leq A} \operatorname{Area} K(v<n)\left(\frac{1}{n+1}-\frac{1}{n+2}\right)\\ &\gg \sum_{1\leq n<cA}\left(n\log\frac{A}{n}\right)\frac{1}{(n+1)(n+2)} \gg (\log A)^2.\end{aligned}$$

□

Remark. The upper bound in Theorem 1.3 is the best possible (apart from the constant), as the case of the disk of radius r shows easily. Also, the same order of magnitude occurs with every sufficiently smooth convex body K of area A. To see this, note that

$$\int_K \frac{dx}{v(x)+1} \geq \int_{K(v<1)} \frac{dx}{v(x)+1} \geq \frac{1}{2}\operatorname{Area} K(v<1).$$

Here $\operatorname{Area} K(v<1) \gg A^{1/3}$, since the right hand side of inequality (4) is the best possible for sufficiently smooth convex bodies.

6 Proof of Theorem 4.2

Let us write $A = \operatorname{Area} K$, where $K \in \mathcal{C}_D^2$. We have

$$\pi r^2 \leq A \leq \pi R^2 = \pi D^2 r^2,$$

and so $r \to \infty$ as $A \to \infty$.

A change of variables. Let us assume the origin is the centre of the inscribed ball $B(r,0)$. Every point $x \in K$ distinct from 0 can be written as $x = x(z,t) = z - tz^0$, where $z \in \partial K$ is the point where the ray $0x$ intersects the boundary of K, $z^0 = z/\|z\|$ is the unit vector in the z-direction, and $t \in [0, \|z\|)$.

Considering ∂K equipped with the arc length measure, we have

$$\int_K f(x)\,dx \leq \int_{\partial K}\int_0^{\|z\|} f(x(z,t))\,dt\,dz,$$

for any (measurable) function f. On the other hand, if we remove a disk or radius $\gg r$ around 0 from the integration domain, then both ingerals agree up to a constant. For example,

$$\int_{K\setminus B(0,r/2)} f(x)\,dx \gg \int_{\partial K}\int_{t:\,x(z,t)\notin B(0,r/2)} f(x(z,t))\,dt\,dz \tag{6}$$

with the implied constant depending on D.

For $z\in\partial K$, we introduce three significant values $t_i=t_i(z)$, $i=1,2,3$, of the parameter t:

- t_1 is where the area of the minimal cap is 1, i.e., $v(x(z,t_1))=1$.
- t_2 is where the width of the minimal cap becomes $1/3$; more precisely, $t_2=\inf\{t\ge 0:\ w(x(z,t_2))\ge 1/3\}$. (Unlike $v(x(z,t))$, the function $t\mapsto w(x(z,t))$ need not be either continuous or monotone, although such situations are not typical.)
- t_3 is where the minimal cap becomes "large"; namely, $v(x(z,t_3))=A_0=A/(10D^2)$.

We note that

$$x_3=x(z,t_3)\notin B(0,r/2), \tag{7}$$

for otherwise, $C(x_3)$ would contain the cap of $B(0,r)$ of depth $r/2$, whose area is more than $r^2/3>A/10D^2=A_0$ (this explains the choice of A_0). This will allow us to use (6).

Insignificance of the border region $K(v\le 1)$. Here is the first step towards the proof of Theorem 4.2.

Lemma 6.1 *For any planar convex body K we have, as* $\operatorname{Area} K\to\infty$,

$$\int_{K(v\ge 1)}\frac{dx}{v(x)}\gg \operatorname{Area} K(v\le 1),$$

where the implied constant is universal.

Proof. The statement is equivariant under area preserving affine transformations. So we assume that K is sandwiched between two concentric circles of radius r and $2r$. (This is Löwner's theorem, cf. [DGK]). Then

$$\operatorname{Area} K(v\le 1)\le \int_{\partial K}\int_0^{t_1} dt\,dz=\int_{\partial K} t_1\,dz.$$

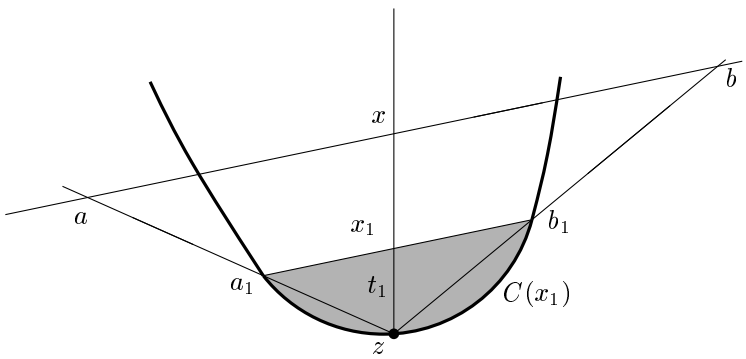

Figure 3: Bounding $v(x)$.

Now we need to bound $v(x)$ from below for $x = x(z,t)$ with $t \geq t_1$; see Fig. 3. The area of $C(x)$ is at most the area of $C(x_1)$ plus the area of the triangle azb, and the latter equals $(t/t_1)^2 \mathrm{Area}\,(a_1 z b_1) \leq (t/t_1)^2$. Hence $v(x) \leq (t/t_1)^2 + 1$. (This also shows that $t_3/t_1 \to \infty$ as $A \to \infty$.) We thus have, using (7) and (6),

$$\int_{K(v\geq 1)} \frac{dx}{v(x)} \gg \int_{\partial K} \int_{t_1}^{t_3} \frac{1}{(t/t_1)^2+1}\, dt\, dz,$$

and the inner integral is at least $\int_{t_1}^{2t_1} dt/((t/t_1)^2+1) \gg t_1$. □

Corollary 6.2 *For any planar convex body K we have, as* $\mathrm{Area}\, K \to \infty$,

$$\int_{K(v\geq 1)} \frac{dx}{v(x)} \ll \int_K \frac{dx}{v(x)+1} \ll \int_{K(v\geq 1)} \frac{dx}{v(x)}$$

where the implied constant is universal.

Proof. Indeed,

$$\begin{aligned} \frac{1}{2}\int_{K(v\geq 1)} \frac{dx}{v(x)} &\leq \int_K \frac{dx}{v(x)+1} = \int_{K(v\geq 1)} \frac{dx}{v(x)+1} + \int_{K(v\leq 1)} \frac{dx}{v(x)+1} \\ &\leq \int_{K(v\geq 1)} \frac{dx}{v(x)} + \mathrm{Area}\, K(v\leq 1) \ll \int_{K(v\geq 1)} \frac{dx}{v(x)}. \end{aligned}$$

□

Further reductions. From now on, we assume $K \in \mathcal{C}_D^2$. The last corollary above shows that Theorem 4.2 is equivalent to

$$\int_{K(v\geq 1),\, w(x)\leq 1/3} \frac{dx}{v(x)} \gg \int_{K(v\geq 1)} \frac{dx}{v(x)}.$$

Next, we observe that the "central region" of K, with $v \geq A_0 = A/10D^2$, is insignificant for the right-hand side. Indeed, $\int_{K(v\geq A_0)} \frac{dx}{v(x)} \leq \int_K \frac{dx}{A_0} = 10D^2$, while $\int_{K(v\geq 1)} \frac{dx}{v(x)} \gg \int_K \frac{dx}{v(x)+1} \gg (\log A)^2$, using Corollary 6.2 and the lower bound in Theorem 1.3. Hence, setting

$$K_0 = K(1 \leq v \leq A_0),$$

we see that Theorem 4.2 follows from

$$\int_{x\in K_0,\, w(x)\leq 1/3} \frac{dx}{v(x)} \gg \int_{x\in K_0} \frac{dx}{v(x)}.$$

Using (6) and (7), we can change to the z, t variables, and it suffices to prove

$$\int_{\partial K} \int_{t_1}^{t_2} \frac{dt\, dz}{v(x(z,t))} \gg \int_{\partial K} \int_{t_1}^{t_3} \frac{dt\, dz}{v(x(z,t))} \tag{8}$$

(we recall that t_2 is where the width of the cap $C(x(z,t_2))$ becomes $1/3$). The proof is divided into two main steps. We let ρ be a sufficiently large constant depending on D, whose value will be specified later. Let $S \subseteq \partial K$ consist of those z for which there is no disk of radius ρ contained in K and touching ∂K at z. First we prove that the contribution of S to the right-hand side of (8) is negligible:

Lemma 6.3 *We have*

$$\int_S \int_{t_1}^{t_3} \frac{dt\, dz}{v(x(z,t))} \ll 1,$$

with the implicit constant depending on D and on ρ.

For each $z \in \partial K \setminus S$, we will be able to compare the inner integrals in (8). Namely, we let $\ell_2 = \ell_2(z)$ be the half-length of the chord cutting the minimal cap $C(x_2)$ from K, where $x_2 = x(z,t_2)$, and we prove the following two lemmas:

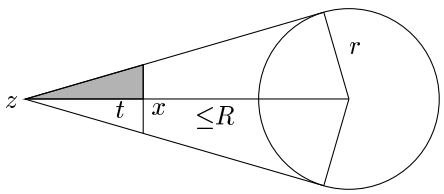

Figure 4: A lower bound for $v(x)$.

Lemma 6.4 *For $\rho = \rho(D)$ sufficiently large and for each $z \in \partial K \setminus S$,*

$$\int_{t_1}^{t_2} \frac{dt}{v(x)} \gg \frac{\log \ell_2}{\ell_2},$$

with the implied constant depending only on D (and not on z).

Lemma 6.5 *For $\rho = \rho(D)$ sufficiently large and for each $z \in \partial K \setminus S$,*

$$\int_{t_2}^{t_3} \frac{dt}{v(x)} \ll \frac{\log \ell_2}{\ell_2},$$

with the implied constant depending only on D (and not on z).

In fact, the inequalities in the last two lemmas hold with universal constants, but they start to be true for large $A = \operatorname{Area} K$ that depends on D.

Lemmas 6.3, 6.4, and 6.5 together imply (8), and thus Theorem 4.2 as well.

The proof of Lemma 6.3 needs the following simple lower bound for $v(x)$:

Claim 6.6 *For $x = x(z,t) \in K_0$, we have $v(x) \geq t^2/(2D)$.*

Proof. We observe that $C(x)$ contains one of the small triangles in Fig. 4 (one of them is shaded), of area at least $t^2/(2D)$. (We also note that $z \in C(x)$, since otherwise, $0 \in C(x)$, and the area of $C(x)$ would be too large.) □

Dealing with sharp corners: proof of Lemma 6.3. The set S is the union of (at most countably many) arcs S_i; see Fig 5. The length of S_i is

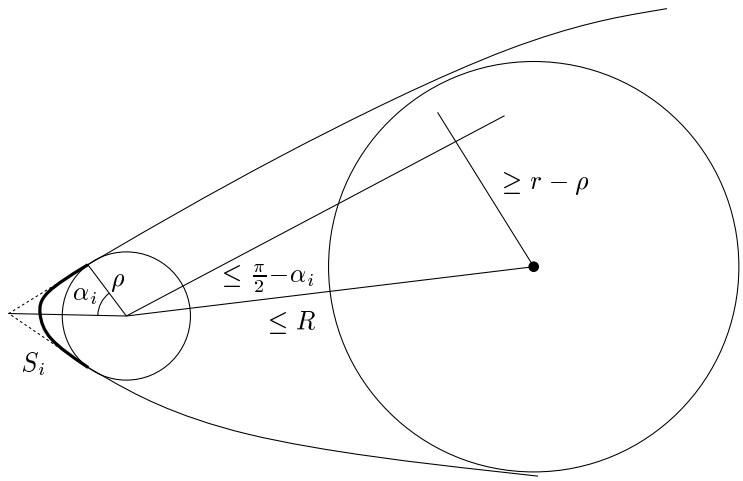

Figure 5: Estimating the length of S.

at most $2\rho\tan\alpha_i$ with

$$\alpha_i \leq \frac{\pi}{2} - \arcsin\frac{r-\rho}{R} \leq \frac{\pi}{2} - \arcsin\frac{1}{2D},$$

since ρ is a constant and $r \to \infty$. Further, $\sum \alpha_i \leq \pi$. We can assume $D \geq 2$, and we get that the total length of S is at most

$$|S| \leq \sum 2\rho\tan\alpha_i \leq 10\rho D.$$

Using Claim 6.6, we calculate

$$\begin{aligned}
\int_S \int_{t_1}^{t_3} \frac{dz\,dt}{v(x)} &\leq \int_S \int_0^R \frac{dz\,dt}{\max\{1, \frac{t^2}{2D}\}} \\
&\leq \int_S \left(\int_0^{\sqrt{2D}} dt + \int_{\sqrt{2D}}^{\infty} \frac{2D}{t^2}\,dt \right) dz \\
&\leq 2\sqrt{2D} \cdot |S| \leq 20\sqrt{2D}\rho \ll 1,
\end{aligned}$$

since ρ depends only on D. Lemma 6.3 is proved. □

Properties of the minimal cap $C(x_2)$. We need some preparations for the proofs of the remaining two lemmas. We assume $z \in \partial K \setminus S$ and $x = x(z,t)$ with minimal cap $C(x)$. We let λ be the line cutting off $C(x)$ from K. Let $q = [z', z''] = \lambda \cap K$ be the corresponding chord with $z', z'' \in \partial K$. The midpoint of the chord $[z', z'']$ is x, and $\ell(x) = \|x - z'\|$ is half of the length of the chord.

Proposition 6.7 *If $w(x) \ll 1$, then*

$$\ell(x) \leq \operatorname{diam} M(x) \leq 2\operatorname{diam} C(x) \ll \ell(x)$$

with the implied constant depending on D only.

Proof. The first inequality follows from $[z', z''] \subset M(x)$. For the second observe that $M(x)$ is symmetric about x, so

$$\operatorname{diam} M(x) = 2\max\{\|y-x\| : y \in M(x)\} = 2\max\{\|y-x\| : y \in M(x) \cap H\},$$

where H is the halfpace with $C(x) = K \cap H$, since $M(x) \cap H \subset C(x)$. Thus, the right-hand side above is at most $2\operatorname{diam} C(x)$. For the last inequality in the proposition we note that, for all $y \in C(x)$, $\|x-y\| \ll \ell(x)$. as otherwise, the angle $z'yz''$ would be too small. (The picture is similar to Fig. 6. This is where we use $w(x) \ll 1$.) □

We now set $t = t_2$; then $x = x(z, t_2) = x_2$, $\ell(x_2) = \ell_2$. The line cutting off $C(x_2)$ is λ_2, and $q_2 = [z', z'']$ is the corresponding chord. We recall that $t_2 = \inf\{t \geq 0 : w(x(z,t)) \geq 1/3\}$. So $w(x_2) \leq 1/3$, and there are x arbitrarily close to x_2 with $w(x) \geq 1/3$.

Claim 6.8

(i) *The angle between lines λ_2 and $z0$ satisfies $\alpha \geq 1/(2D)$.*

(ii) *The diameter of $C(x_2)$ is $\ll \ell_2$.*

(iii) *We have $1 \ll t_2 \ll 1$.*

(iv) *For every $c \geq 1$ there exists $\rho = \rho(D, c)$ such that $\ell_2 \geq c$.*

Proof. Almost all of this is simple plane geometry. Part (i) is obvious from Fig. 6 as $B(0, r - \frac{1}{3})$ is disjoint from $C(x_2)$.

Further, (ii) is contained in Proposition 6.7

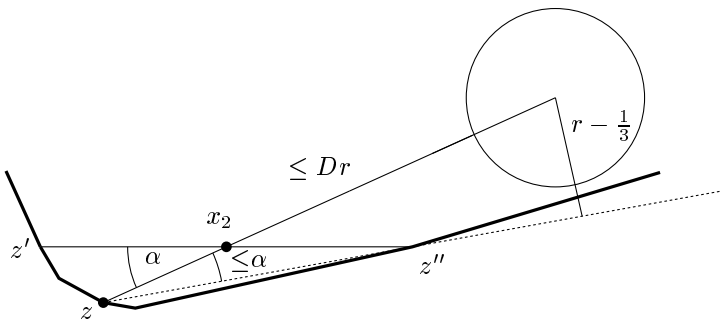

Figure 6: Estimating α.

We know that $w(x_2) \leq 1/3$, and $t_2 \ll 1$ follows from this and (i).

Next, we check that $w(x_2) \gg 1$. By the definition of t_2, there are points x' with $w(x') \geq 1/3$ arbitrarily close to x_2. Choose such a sequence x'; then $M(x') \to M(x_2)$. Now, by Proposition 6.7,

$$v(x_2) = \operatorname{Area} C(x_2) \leq \operatorname{diam} C(x_2) w(x_2) \ll \ell_2 w(x_2),$$

and $\ell(x')w(x') \leq u(x') \to u(x_2) \leq 2v(x_2)$, showing that

$$\ell(x') \leq 6v(x_2) \ll \ell_2 w(x_2).$$

Again by Proposition 6.7 and $M(x') \to M(x)$ we have (provided x' is close enough to x_2)

$$\ell(x') \gg \operatorname{diam} M(x') \geq \frac{1}{2} \operatorname{diam} M(x_2) \geq \ell_2.$$

This proves that $w(x_2) \gg 1$.

We consider a point $y \in \partial K$ at distance $w(x_2) \gg 1$ from the line λ_2; see Fig. 7. By symmetry, we may suppose that y lies to the left of z, say. We know that the angle $yz''z'$ is $\gg 1/\ell_2$. Considering the triangle $x_2 z'' \tilde{z}$ then yields $t_2 \gg 1$ as required.

Finally, if ρ is chosen much larger than w_2, then the orthogonal projection z^* of z on the line λ_2' lies on the segment $z'z''$, since there is a disk of radius ρ avoiding z' and z'' and having z on the boundary; see Fig. 8. Moreover, $\|z - z^*\| = t_2 \sin\alpha \gg 1$, with the implicit constant independent

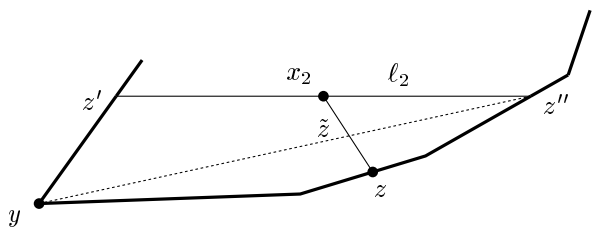

Figure 7: A lower bound for $t_2 = \|z - x_2\|$.

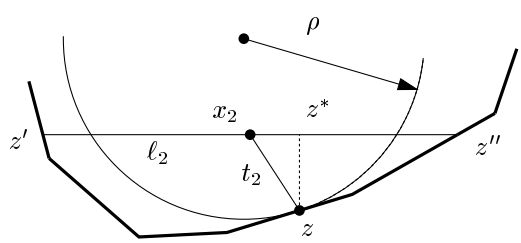

Figure 8: A lower bound on ℓ_2.

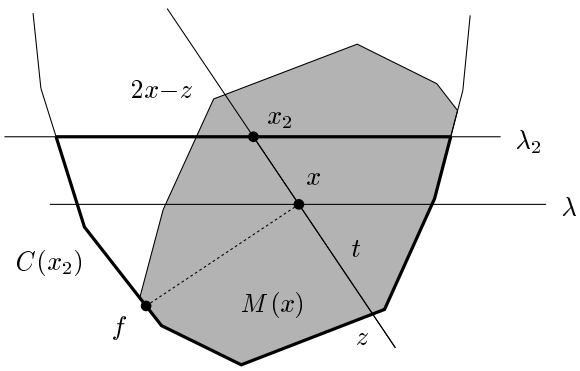

Figure 9: Estimating the width and diameter of $M(x)$.

of ρ. So the chord $[z', z'']$ is longer than a chord of a disk of radius ρ that cuts off from it a small cap of width at least $\|z - z^*\| \gg t_2$. The length of such a chord is $\gg \sqrt{\rho t_2}$ and (iv) follows. $\square$

Proof of Lemma 6.4. We need to bound the integral

$$\int_{t_1}^{t_2} \frac{dt}{v(x)}$$

from below, and so an upper bound on $v(x)$ is needed. For this, we employ $M(x)$, the Macbeath region with centre x, where $x = x(z, t)$ and $t \in [t_1, t_2]$. We note that $v(x) = o(A)$ (by Claim 3.3, say), and so Lemma 2.1 applies and yields $v(x) \ll u(x) = \text{Area}\, M(x)$.

By considering the tangents to $M(x)$ at z and at the point $2x-z$ centrally symmetric to it, we see that $M(x)$ has width at most $2t$ (Fig. 9). Next, we consider the line λ through x parallel to the chord cutting off $C(x_2)$. λ cuts $M(x)$ into two symmetric parts, one of which is contained in $C(x_2)$. It follows that the diameter of $M(x)$ is no larger than twice the diameter of $C(x_2)$, which is $\ll \ell_2$ by Proposition 6.7. Hence $v(x) \ll u(x) \ll t\ell_2$.

We have $t_2 \gg 1$ by Claim 6.8(iii). We need to show that t_1 is small, namely, $t_1 \ll 1/\sqrt{\ell_2}$. To this end, we pass a line parallel to λ_2 through x_1 (Fig. 10), and we note that the cap cut off by it has area at least 1 and it contains the shaded triangle (or the corresponding triangle on the other side). This triangle is similar to the triangle x_2zz' with the ratio t_1/t_2, and

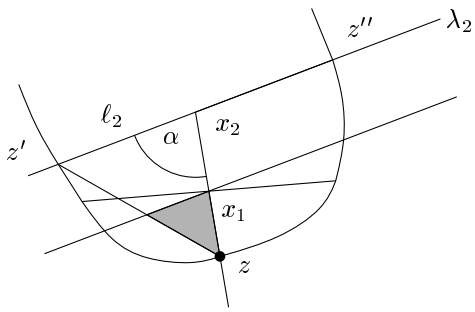

Figure 10: Estimating t_1.

the latter triangle has area $\frac{1}{2}\ell_2 t_2 \sin\alpha \gg t_2\ell_2$ (using Claim 6.8(i)). Hence $1 \gg (t_1/t_2)^2 t_2\ell_2 \gg t_1^2\ell_2$ (as $t_2 \gg 1$), and we get $t_1 \ll 1/\sqrt{\ell_2}$ as needed. Then

$$\int_{t_1}^{t_2} \frac{dt}{v(x)} \gg \int_{1/\sqrt{\ell_2}}^{1} \frac{dt}{t\ell_2} \gg \frac{\log \ell_2}{\ell_2}.$$

Lemma 6.4 is proved. □

Proof of Lemma 6.5. It is convenient to break the integral

$$\int_{t_2}^{t_3} \frac{dt}{v(x)}$$

into two ranges.

The first range is $t_2 \le t \le 2t_2$. We have already noted that $v(x_2) \gg t_2\ell_2$ in the proof of Lemma 6.4, and the same estimate holds, by the monotonicity of $v(x(z,t))$ in t, for all $t \ge t_2$. Thus

$$\int_{t_2}^{2t_2} \frac{dt}{v(x)} \ll \int_{t_2}^{2t_2} \frac{dt}{t_2\ell_2} = \frac{1}{\ell_2},$$

which is negligible compared to our target expression $(\log \ell_2)/\ell_2$, by Claim 6.8(iv).

To handle the remaining range $[2t_2, t_3]$, we let q_0 be the segment of length $2r$ parallel to q_2 (the chord cutting off $C(x_2)$) with center at 0, and let $T = \mathrm{conv}(q_2 \cup q_0)$ (Fig. 11). The trapezoid T is contained in K, and so its minimal caps are no smaller than the minimal caps of K. By (7),

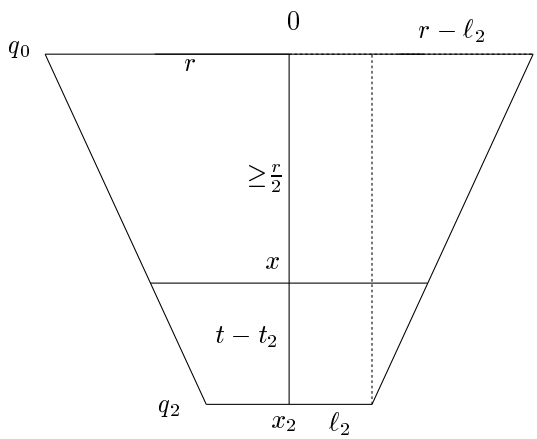

Figure 11: The trapezoid T.

the distance of $x_3 = x(z, t_3)$ from 0 is at least $r/2$, and this is also a lower bound on the height of T.

We now distinguish two cases, according to the value of ℓ_2.

1. $\ell_2 \geq r/2$. The area of the minimal cap of T at a point $x = x(z, t)$ (on the axis of symmetry of T) is at least $\min((t - t_2)r, r^2/2) \gg tr$ (as $t \ll r$). Hence

$$\int_{2t_2}^{t_3} \frac{dt}{v(x)} \ll \int_1^r \frac{dt}{tr} \ll \frac{\log r}{r} \ll \frac{\log \ell_2}{\ell_2}.$$

2. For $\ell_2 \leq r/2$, the area of the minimal cap of T for x is at least

$$\min\left(r^2/2, (t - t_2)\ell_2 + \frac{(t - t_2)^2}{||x_2 - 0||}(r - \ell_2)\right) \gg t\ell_2 + t^2,$$

and

$$\int_{2t_2}^{t_3} \frac{dt}{v(x)} \ll \int_1^\infty \frac{dt}{t\ell_2 + t^2} \ll \frac{\log \ell_2}{\ell_2}.$$

This establishes Lemma 6.5. □

7 Open problems

The method used for estimating the expected number of vertices of $I_L(K)$ does not seem to extend to faces of larger dimensions. It would be very interesting to count higher-dimensional faces as well. It seems that the order of magnitude of $\mathbf{E}\left[f_k(I_L(K))\right]$ should be similar to that of $\mathbf{E}\left[f_0(I_L(K))\right]$.

As for extending the analysis of the expected missed area, one could perhaps begin with the following question: Is it true that

$$\frac{1}{A} \ll \sup_C \mathrm{Prob}[C \cap L = \emptyset] \ll \frac{1}{A},$$

where the supremum is over all convex bodies C in $\mathbf{R}^d$ of volume A, and $A \to \infty$? It is sufficient to look at boxes of volume A, of course.

References

[Bá89] I. Bárány: *Intrinsic volumes and f-vectors of random polytopes.* Math. Annalen, **285** (1989), 671–699.

[BHL] I. Bárány, R. Howe, L. Lovász: *On integer points in polyhedra: a lower bound.* Combinatorica, **12** (1992), 135–142.

[BL1] I. Bárány, D. G. Larman: *Convex bodies, economic cap coverings, random polytopes.* Mathematika, **35** (1998), 274–291.

[BL2] I. Bárány, D. G. Larman: *The convex hull of the integer points in a large ball.* Math. Annalen, **312** (1998), 167–181.

[CHKM] W. Cook, M. Hartmann, R. Kannan, C. McDiarmid: *On integer points in polyhedra.* Combinatorica, **12** (1992), 27–37.

[DGK] L. Danzer, B. Grünbaum, V. Klee: *Helly's theorem and its relatives.* In: Proc. Symp. Pure Math., Vol VIII, Convexity. Amer. Math. Soc, Providence, RI, 1963.

[ELR] G. Ewald, D. G. Larman, C. A. Rogers: *The directions of the line segments and of the r-dimensional balls on the boundary of a convex body in Euclidean space.* Mathematika, **17** (1970), 1–20.

[Hu] C. A. J. Hurkens: *Blowing up convex sets in the plane.* Linear Algebra Appl., **134** (1990), 121–128.

[KL] R. Kannan, L. Lovász: *Covering minima and lattice point free convex bodies.* Annals of Math., **128** (1988), 577–622.

[Kh] A. Khintchin: *A quantitative formulation of Kronecker's theory of approximation* (in Russian). Izv.Akad. Nauk SSSR, Ser. Mat., **12** (1948), 113–122.

[Ma] A. M. Macbeath: *A theorem on non-homogeneous lattices.* Annals of Math., **56** (1952), 269–293.